US 20080014009A1

(19) United States

(12) Patent Application Publication

Bush et al.

(10) Pub. No.: US 2008/0014009 A1

(43) Pub. Date: Jan. 17, 2008

(54) WRITING IMPLEMENT HOLDING DEVICE

(75) Inventors: **Chester L. Bush**, Grand Rapids, MI (US); **Brian J. Schroder**, Grand Rapids, MI (US)

Correspondence Address:
VAN DYKE, GARDNER, LINN & BURKHART, LLP
SUITE 207, 2851 CHARLEVOIX DRIVE, S.E.
GRAND RAPIDS, MI 49546

(73) Assignee: **WRITING C.L.A.W., INC.**, Grand Rapids, MI (US)

(21) Appl. No.: **11/697,080**

(22) Filed: **Apr. 5, 2007**

Related U.S. Application Data

(60) Provisional application No. 60/807,270, filed on Jul. 13, 2006, provisional application No. 60/841,441, filed on Aug. 31, 2006, provisional application No. 60/849,500, filed on Oct. 5, 2006.

Publication Classification

(51) **Int. Cl.**
A46B 5/04 (2006.01)
A46B 5/02 (2006.01)

(52) **U.S. Cl.** **401/7**; 401/6

(57) **ABSTRACT**

A writing implement holding device includes at least one finger receptacle configured to receive a finger of a user and a fastening element attached to the at least one finger receptacle. The fastening element is configured to be removably secured to a writing implement, such as a pen or pencil or the like. The at least one finger receptacle includes side wall portions and an open insert end. The insert end is configured to enable a user to insert at least one finger into the at least one finger receptacle such that the side wall portions surround a segment of the inserted finger or fingers. The finger receptacle may be generally parallel to or generally along the writing implement, such that when the finger of a user is inserted into the finger receptacle, the finger may also be generally parallel to or generally along the writing implement.

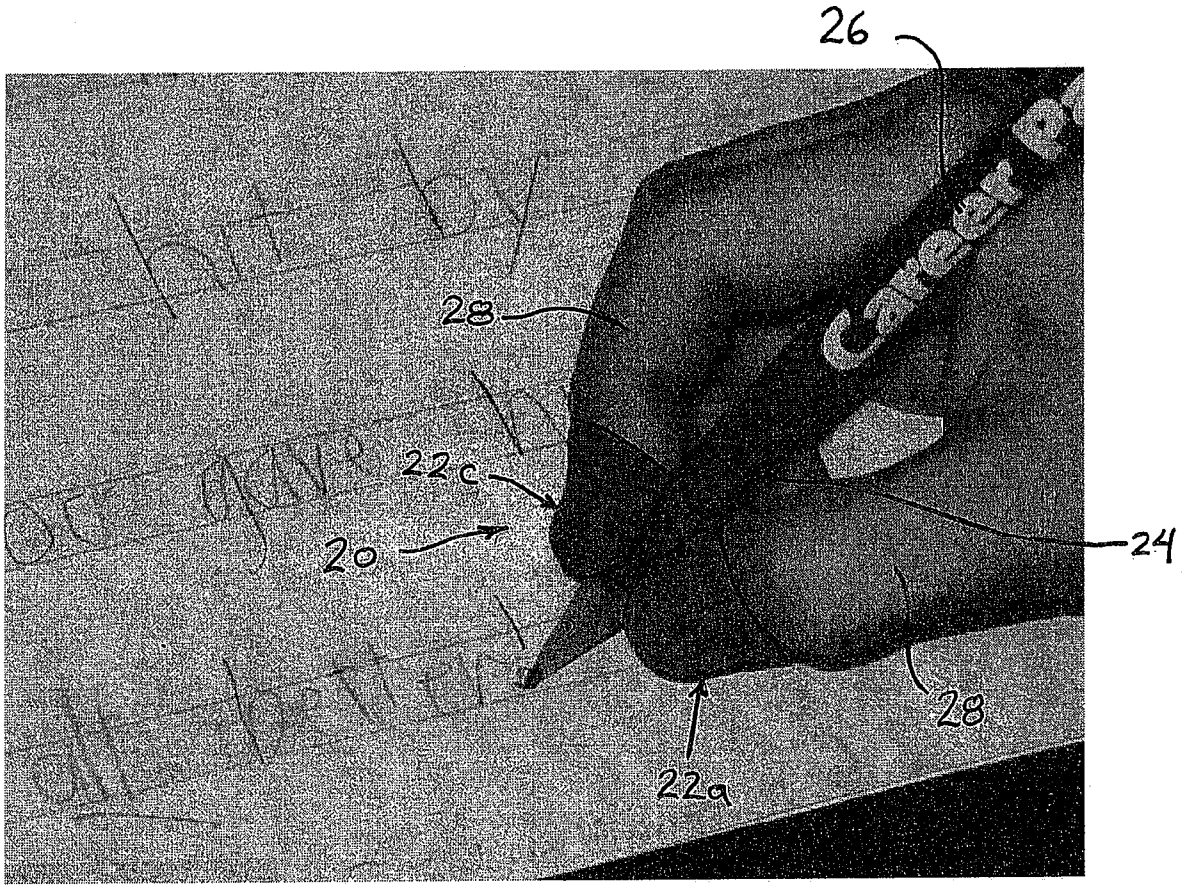

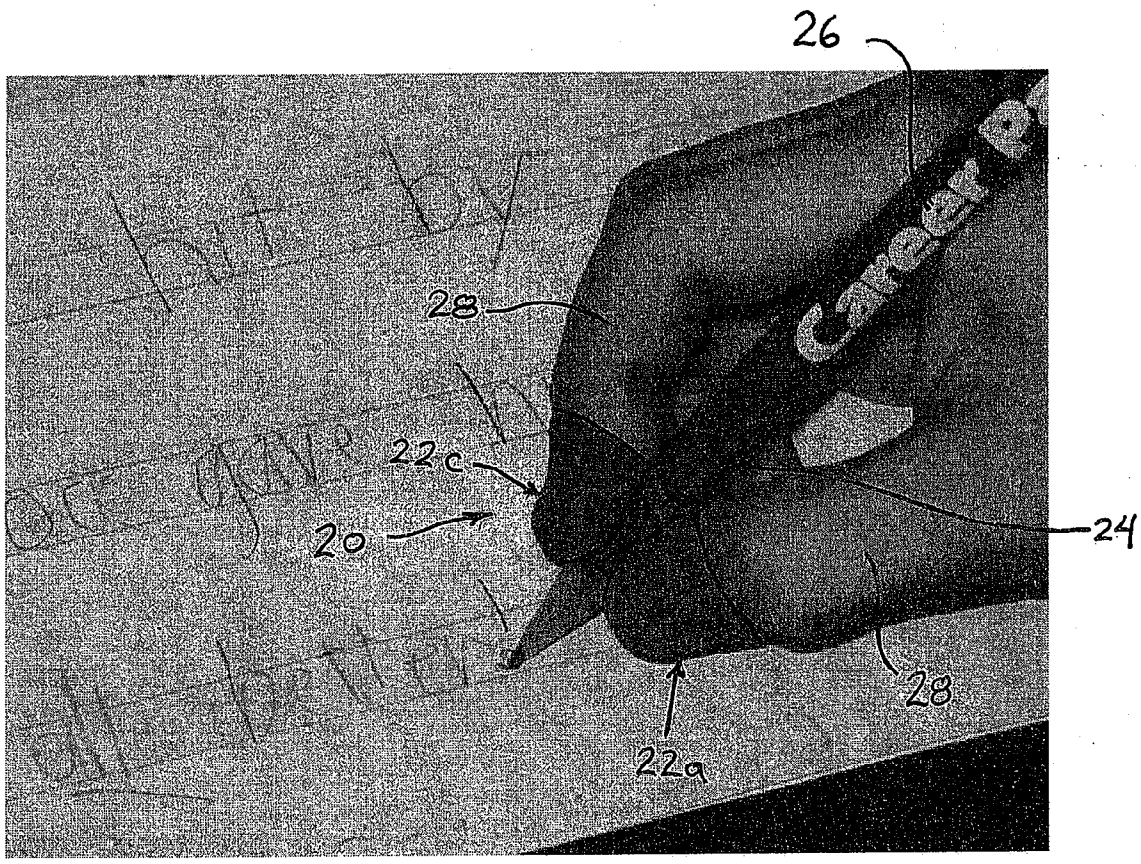

FIG. 1

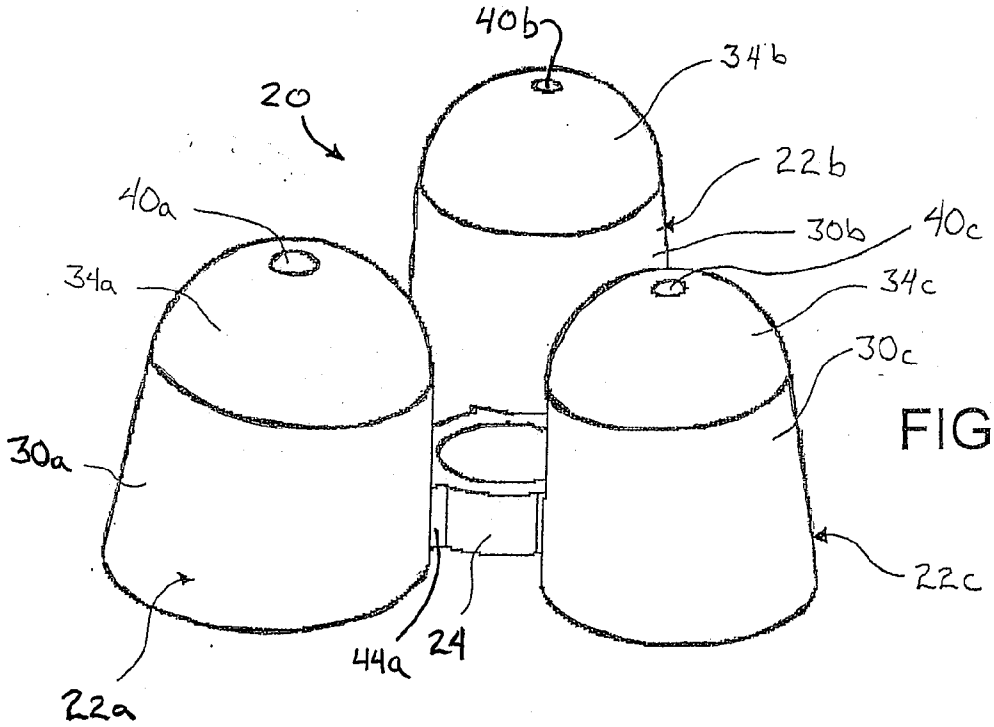
40b
34b
20
22b
40a
30b
40c
34a
34c
30c
30a
22c
44a
24
22a

FIG. 2

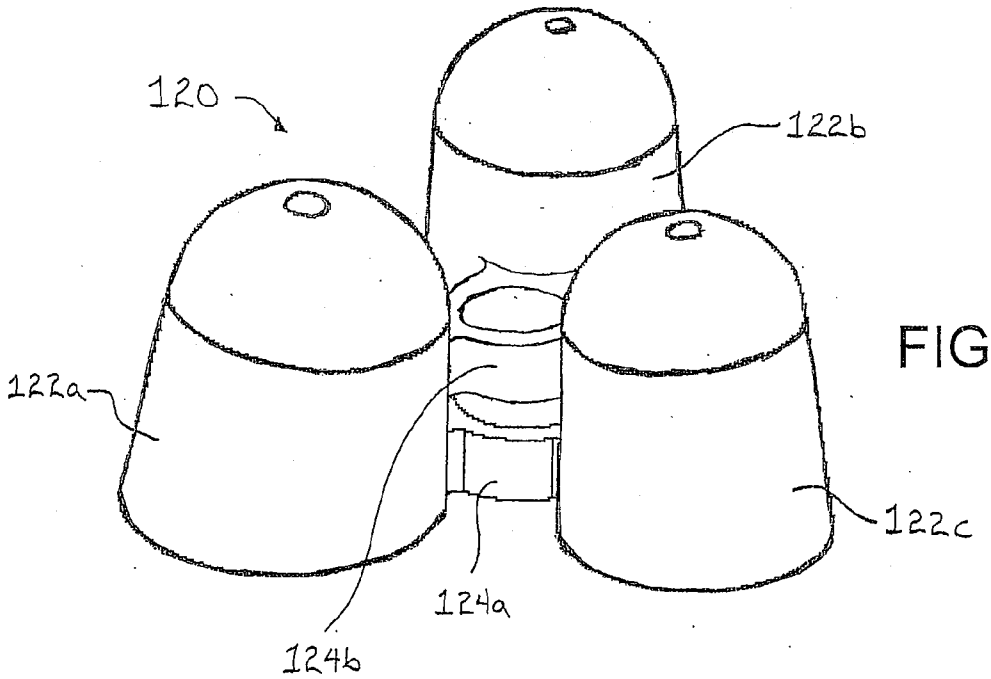
120
122b
122a
122c
124a
124b

FIG. 2A

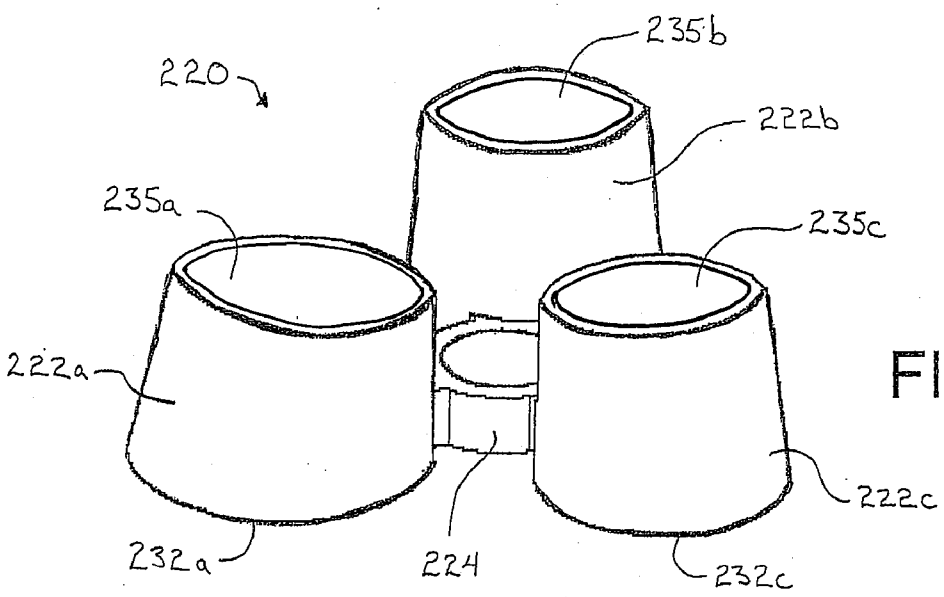

FIG. 2B

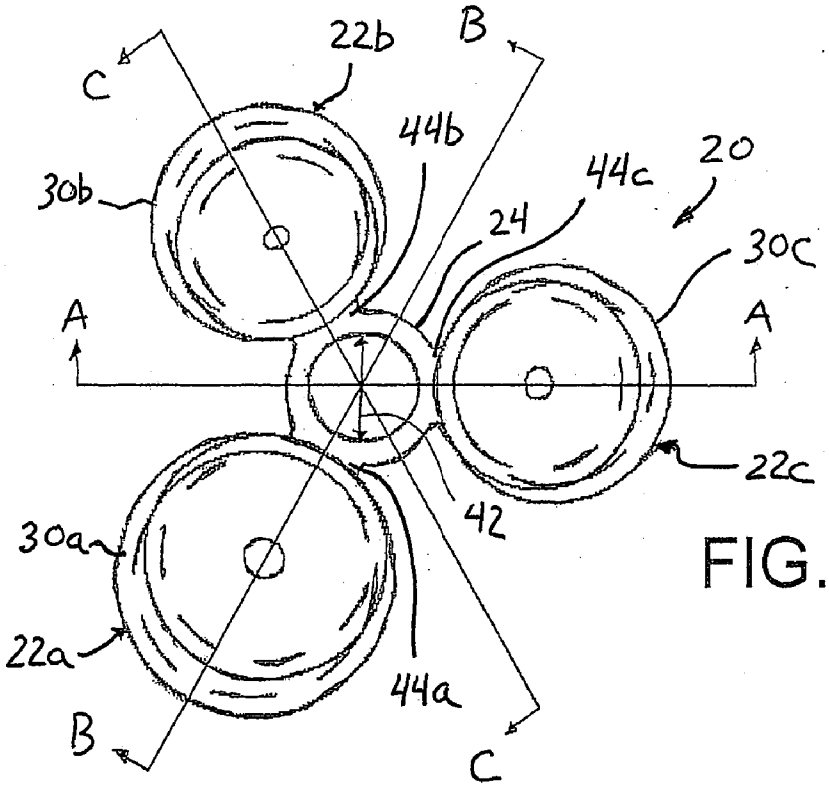
22b
B
C
44b
44c
20
30b
24
30c
A
A
22c
42
30a
22a
44a
B
C

FIG. 3

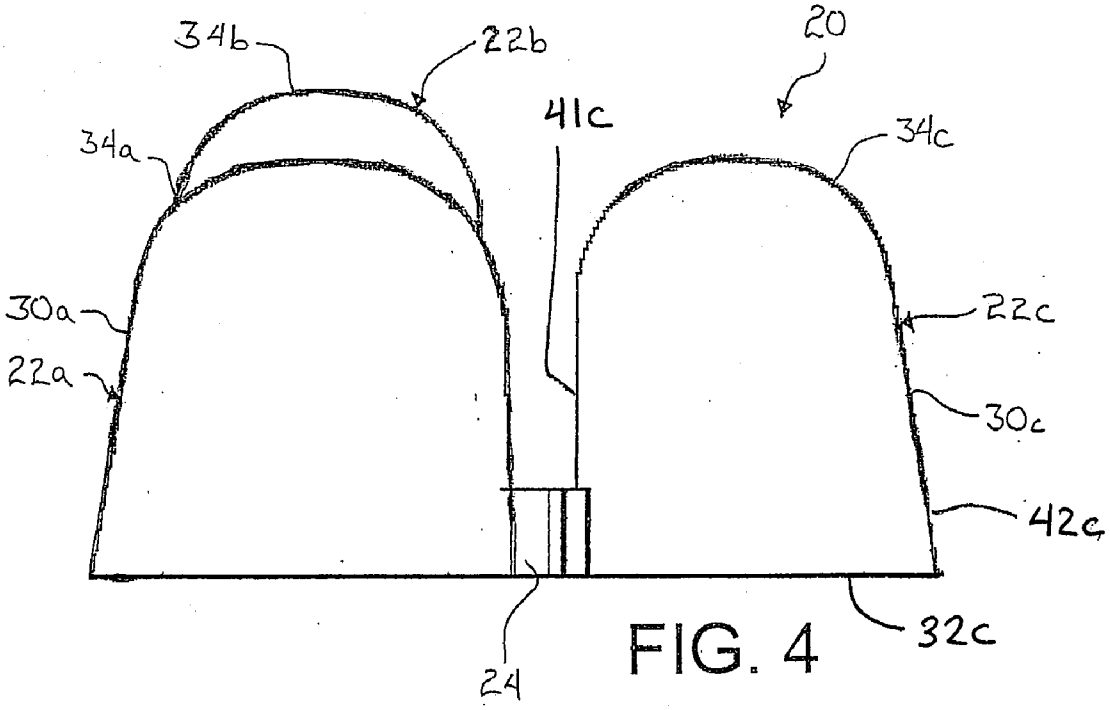
34b
22b
20
41c
34a
34c
30a
22c
22a
30c
42c
32c
24

FIG. 4

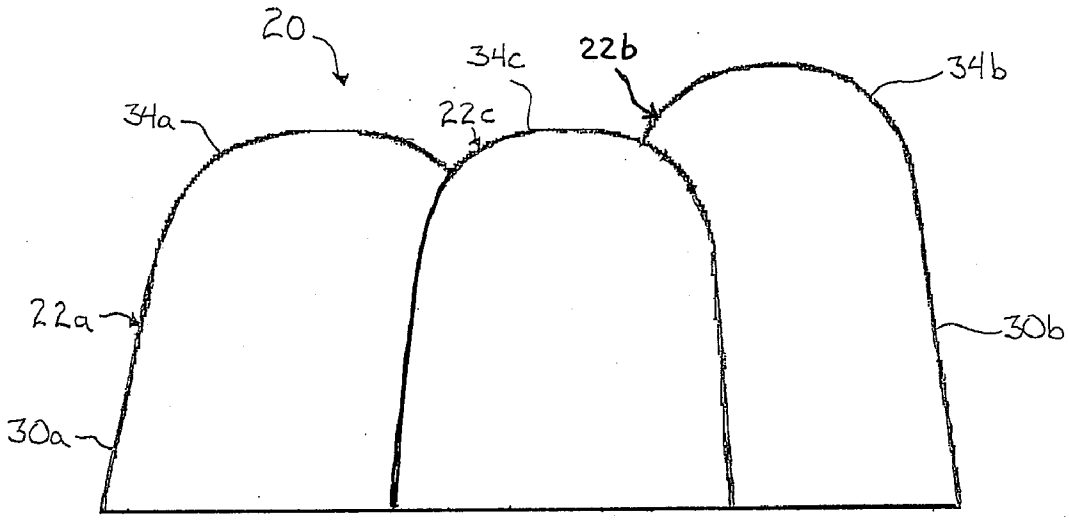
20
34c
22b
34b
34a
22c
22a
30b
30a

FIG. 5

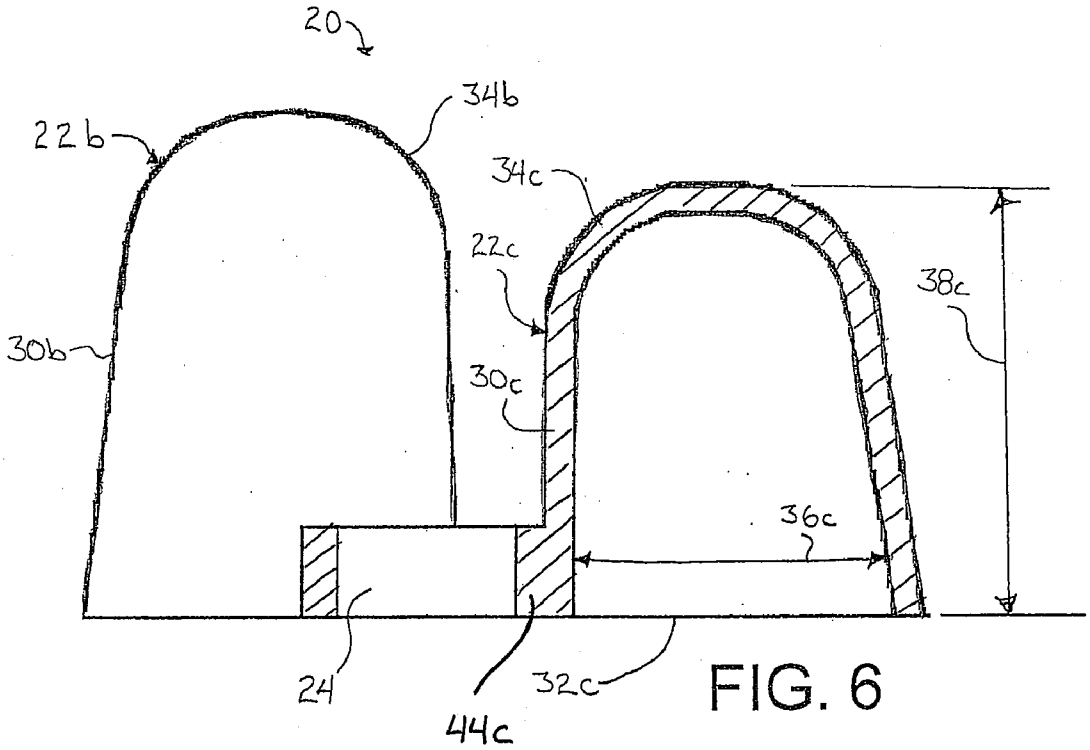
20
34b
22b
34c
22c
38c
30b
30c
36c
24
44c
32c

FIG. 6

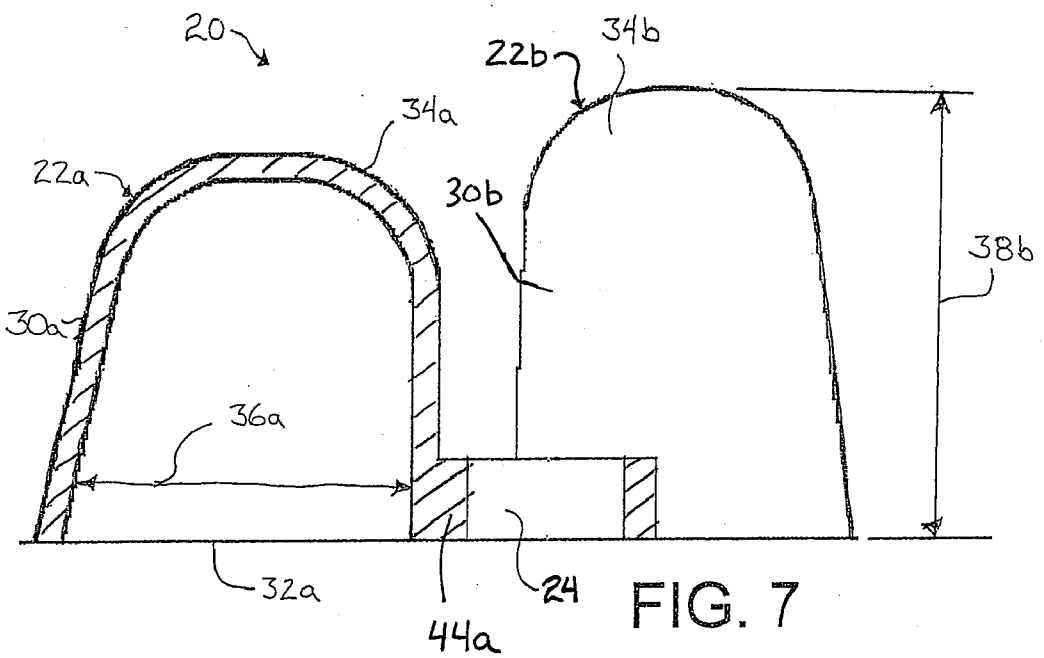
20
22b
34b
34a
22a
30b
38b
30a
36a
32a
24
44a

FIG. 7

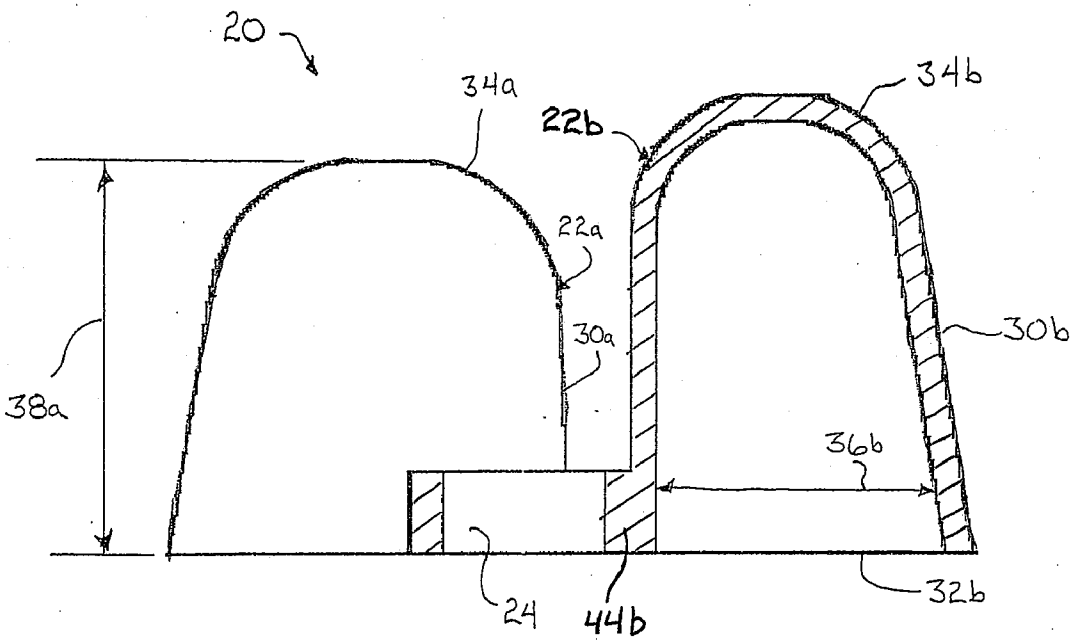
20
34a
22b
34b
22a
30a
30b
38a
36b
24
44b
32b

FIG. 8

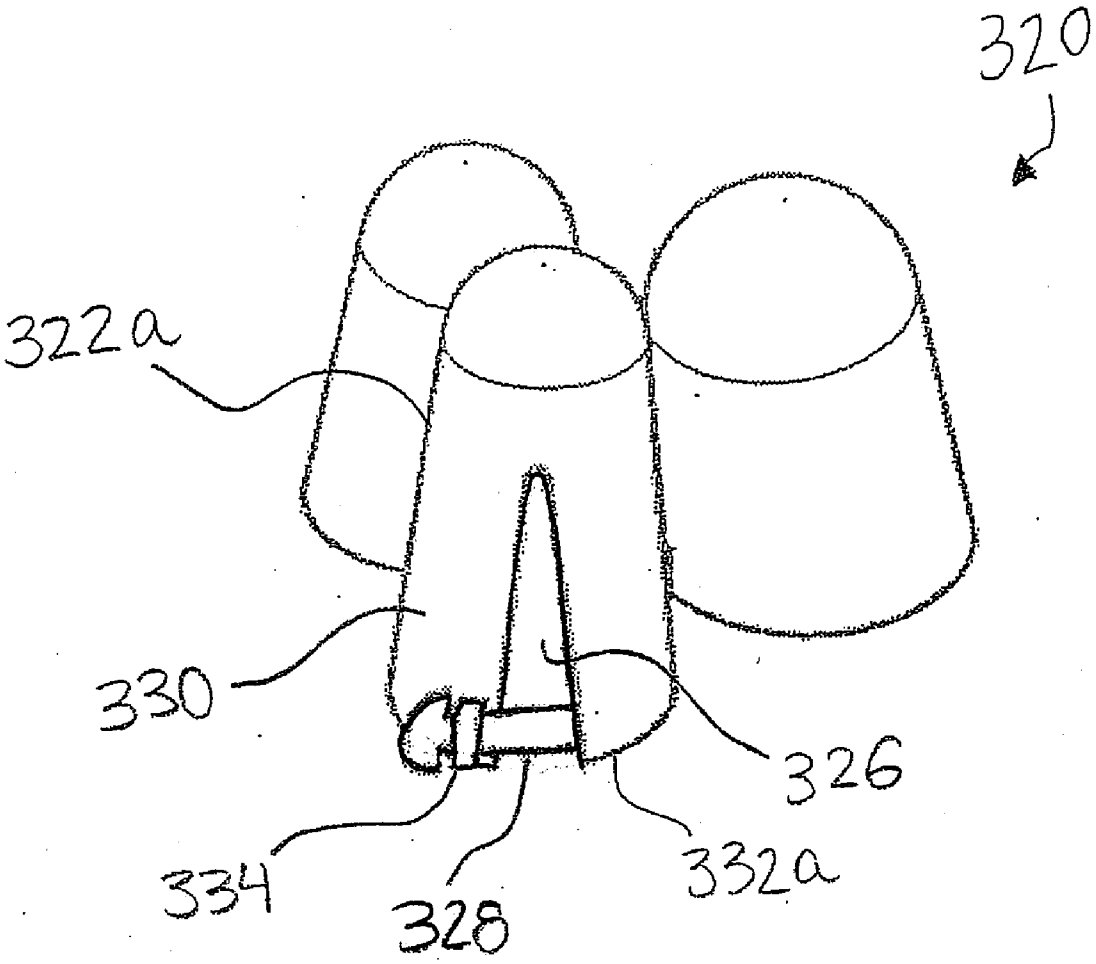

FIG. 9

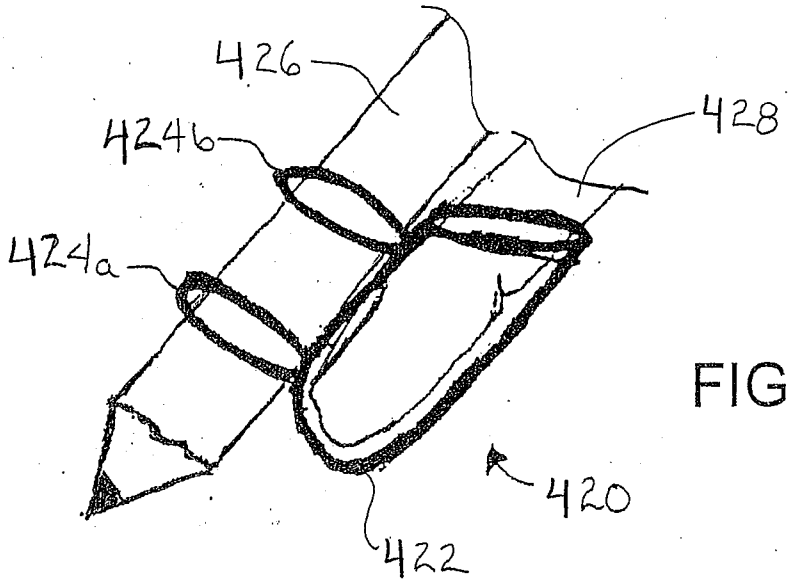

FIG. 10

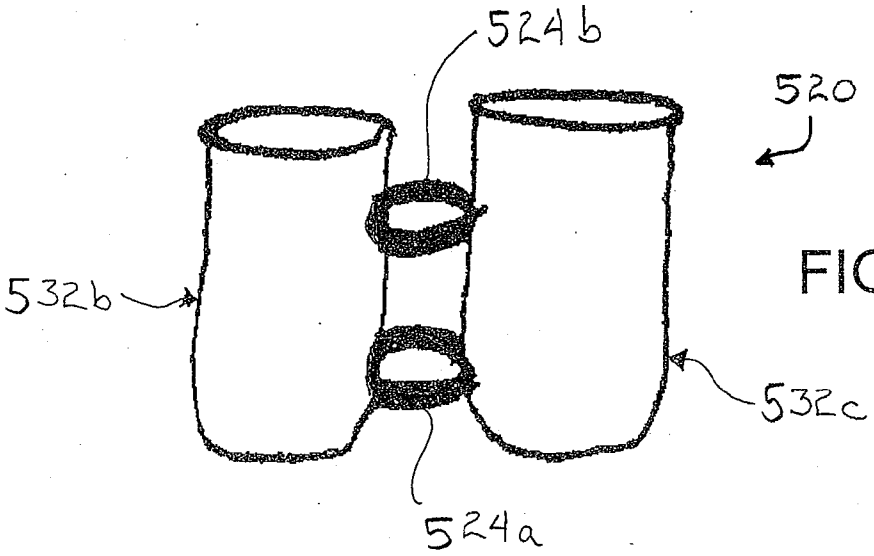

FIG. 11

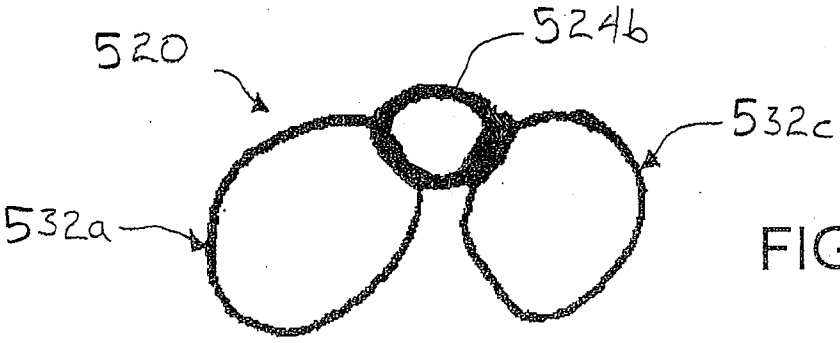

FIG. 12

WRITING IMPLEMENT HOLDING DEVICE

CROSS REFERENCE TO RELATED APPLICATIONS

[0001] The present application claims the benefit of U.S. provisional applications, Ser. No. 60/807,270, filed Jul. 13, 2006 by Bush III for WRITING IMPLEMENT HOLDING DEVICE; Ser. No. 60/841,441, filed Aug. 31, 2006; and Ser. No. 60/849,500, filed Oct. 5, 2006, which are hereby incorporated herein by reference in their entireties.

BACKGROUND OF THE INVENTION

[0002] The present invention is directed to a holding element or guide element for a writing implement, and in particular to a writing aid for teaching and/or assisting individual's to hold a writing implement, such as a pen or pencil or the like.

[0003] When learning to write, many people have trouble getting used to the correct way in which to hold a pen or pencil. The correct hand and finger positioning may feel awkward, and often the fingers of the learner will slip into an incorrect position. As a result, the learner may develop poor writing habits, which may be difficult to break.

[0004] To aid a person when learning to write, devices known in the art as "pencil grips" have been provided. Pencil grips are adapted to be attached to a writing utensil and provide slight indentations onto which the learner's fingers may be placed. However, the learner's fingers are not directed to or secured in a correct position. Nor are the learner's fingers prevented from slipping to an incorrect position. Thus, poor writing habits may still be developed, even with the use of these types of devices.

SUMMARY OF THE INVENTION

[0005] The present invention provides a holding or guide element or writing aid that may be used to properly position one or more fingers, such as the thumb, forefinger, and middle finger, of a user about a writing implement, such as a pen or pencil or the like, in the correct orientation for teaching proper writing form. The writing aid may also assist individuals with hand and/or finger infirmities in holding a writing implement.

[0006] According to an aspect of the present invention, a writing implement holding device or element comprises at least one finger receptacle configured to receive a finger of a user and at least one fastening element attached to the at least one finger receptacle. The at least one fastening element is adapted to being removably secured to a writing implement, such as a pen or pencil or the like, to aid use of the writing implement when the user inserts at least one finger into the at least one finger receptacle. The at least one finger receptacle includes side wall portions and an open insert end, which is configured to enable a user to insert a finger into the finger receptacle such that the side wall portions surround a segment of the inserted finger.

[0007] The at least one finger receptacle may be arranged or oriented generally parallel to an axis of the fastening element, such that the finger or fingers of the user is/are generally parallel to the writing implement when inserted into the receptacle or receptacles, and when the writing aid is attached to a writing implement. The finger receptacle may be flexibly attached to the fastening element, such as via at least one flexible link or attaching element, such that the user may adjust their finger position relative to the fastening element and the writing implement, while remaining generally at or near the proper finger position for holding the writing implement. Optionally, the writing aid may include one, two or three finger receptacles and may include one or more fastening elements for affixing the writing aid to a writing implement.

[0008] The writing aid thus provides a readily useable device for teaching younger children the proper form for holding pens or pencils or crayons or markers or the like. The writing aid is readily applied to and removed from a variety of writing implements and enables a child or adult to be trained in proper writing technique while limiting the need for an instructor to manually position and/or hold the user's hand to the writing implement. The writing aid also provides a convenient device to assist individuals with hand and/or finger infirmities in holding a writing implement.

[0009] These and other objects, advantages, purposes and features of the present invention will become apparent upon review of the following specification in conjunction with the drawings.

BRIEF DESCRIPTION OF THE DRAWINGS

[0010] FIG. **1** is a perspective view of a writing implement holding device in accordance with the present invention, shown affixed to a writing implement and being used to receive the fingers of a user;

[0011] FIG. **2** is a perspective view of the writing aid of FIG. **1**, shown removed from the writing implement;

[0012] FIG. **2**A is a perspective view of another writing aid in accordance with the present invention;

[0013] FIG. **2**B is a perspective view of another writing aid in accordance with the present invention;

[0014] FIG. **3** is an end view of the writing aid of FIG. **2**;

[0015] FIG. **4** is a side elevation of the writing aid of FIG. **2**;

[0016] FIG. **5** is another side elevation of the writing aid of FIG. **2**;

[0017] FIG. **6** is a side elevation and partial sectional view of the writing aid taken along the line A-A of FIG. **3**;

[0018] FIG. **7** is a side elevation and partial sectional view of the writing aid taken along the line B-B of FIG. **3**;

[0019] FIG. **8** is a side elevation and partial sectional view of the writing aid taken along the line C-C of FIG. **3**;

[0020] FIG. **9** is a perspective view of another writing aid in accordance with the present invention, having an adjustable strap;

[0021] FIG. **10** is a perspective view of another writing aid in accordance with the present invention;

[0022] FIG. **11** is a perspective view of another writing aid in accordance with the present invention; and

[0023] FIG. **12** is an end view of the writing aid of FIG. **11**.

DESCRIPTION OF THE PREFERRED EMBODIMENTS

[0024] The present invention will now be described with reference to the accompanying figures, wherein the numbered elements in the following written description correspond to like-numbered elements in the figures. A writing implement holding or guiding device or element or writing aid **20** includes three finger receptacles or cones **22***a*, **22***b*, **22***c* disposed about a mounting element or fastening element or ring **24** (FIGS. **1** and **2**). Fastening element **24** enables writing aid **20** to be removably affixed to a writing implement **26**, such as the pencil shown or other writing instrument or tool, such as a pen or pencil or marker or crayon or the like. A user may then insert his or her fingers **28** into finger receptacles **22***a*, **22***b*, **22***c* of writing aid **20**. Finger

receptacles **22***a*, **22***b*, **22***c* are positioned about fastening element **24** such that the finger receptacles are generally parallel to an axis of fastening element **24**, and thus generally parallel to the writing implement when the writing aid **20** is attached to writing implement or pen or pencil **26**. As a result, the fingers **28** of the user are also generally parallel to the writing implement or pen or pencil **26** when inserted into the receptacles when the writing aid is attached to the writing implement. Thus, with the use of writing aid **20**, the pen or pencil **26** is held by the user with proper form. Thus, writing aid **20** is well adapted as a training device for teaching children how to properly hold a writing implement **26**, such as when learning how to write. Furthermore, a writing aid with alternatively sized and/or shaped finger receptacles may be used to assist adults or other individuals with hand afflictions or infirmities to hold a writing implement, such as individuals having arthritis, loss of finger/hand strength associated with advanced age, or the like.

[0025] Optionally, and desirably, writing aid **20** may be unitarily constructed or molded (such as injection molded) from an elastomeric or flexible material such that the writing aid is able to at least partially or substantially conform to a user's fingers **28**. For example, writing aid **20** may be formed from a thermoplastic rubber (TPR) or from a polyvinyl chloride (PVC) material or a neoprene rubber compound or other suitable flexible material, and may be formed in different colors and/or sizes. The flexibility of writing aid **20** also provides a user with limited movement of the finger receptacles about the fastening element and about the writing implement to enable the user to feel some control of the writing implement and/or develop motor skills associated with writing. The flexible material also allows the fastening element or ring to expand or stretch to receive the writing implement therethrough, and thus may readily adapt to different sized and/or shaped writing implements. It should be appreciated however, that the writing aid may be constructed of a less flexible or inflexible material and still function as intended within the scope of the present invention.

[0026] In the illustrated embodiment, writing aid **20** includes a thumb receptacle or receiving element **22***a*, a middle finger receptacle or receiving element **22***b*, and a forefinger or pointer finger or index finger receptacle or receiving element **22***c*. As shown in FIGS. **3**, **7**, and **8**, thumb receptacle member **22***a* has a slightly larger inner diameter **36***a* relative to the inner diameter **36***b* of middle finger receptacle **22***b* and the inner diameter **36***c* of forefinger receptacle **22***c* to accommodate the thumb of an individual. Further, and as can be seen with reference to FIGS. **6-8**, middle finger receptacle **22***b* is constructed to have a slightly greater length **38***b* relative to the length **38***a* of thumb receptacle **22***a* and the length **38***c* of forefinger receptacle **22***c*.

[0027] Each receptacle **22** is formed to have a generally cylindrical or conical side wall portion **30***a*, **30***b*, **30***c*. The conical shape of the side wall portions enhances the ability of the receptacles to receive the fingers of the user, while providing a substantial gripping surface at the writing implement. As previously stated, the finger receptacles of the writing aid may be connected to the fastening member such that the longitudinal axes of the receptacles are positioned generally parallel to or generally along the longitudinal axis of fastening element **24**, and thus generally parallel to or along the writing implement when the writing aid is attached to the writing implement. In an embodiment in which the finger receptacles include conical side wall portions, the parallel configuration is achieved by securing the receptacles to the fastener member such that the inner side walls of the receptacles are generally parallel to the writing implement, while the outer side walls tend to flare radially outward and away from the fastening element and the writing implement. For example, as shown in FIG. **4**, inner side wall portion **41***c* of receptacle **22***c* is generally parallel to an implement that may be inserted into fastening element **24**, while outer side wall portion **42***c* flares radially outward in comparison with inner side wall portion **41***c*.

[0028] Each finger receptacle **22***a*, **22***b*, **22***c* includes an open insert end **32***a*, **32***b*, **32***c*, respectively, and may have closed ends or cap portions **34***a*, **34***b*, **34***c* opposite the insert ends. As shown in FIGS. **2** and **3**, finger receptacles **22***a*, **22***b*, **22***c* may have an aperture or hole **40***a*, **40***b*, **40***c* through end or cap portion **34***a*, **34***b*, **34***c* to enable air flow or breathing when a finger **28** is inserted into the finger receptacle. Apertures **40***a*, **40***b*, **40***c* also enable a user's fingers **28** to be more readily removed from the respective finger receptacles **22***a*, **22***b*, **22***c* by inhibiting the formation of a vacuum therein as the user pulls or moves his or her finger from the receptacle. Although a single breathing hole is illustrated, multiple variously configured and located apertures may alternatively be provided on or through the finger receptacles, or the finger receptacles may not include an aperture through the end or cap portion of the finger receptacle, while remaining within the spirit and scope of the present invention. The open insert end is configured to receive a user's finger when the user inserts, his or her finger into the finger receptacle, whereby, the side wall portion **30***a*, **30***b*, **30***c* substantially surround a segment or portion of the inserted finger, in order to retain the finger at the writing aid and writing implement.

[0029] As best seen in FIGS. **3** and **6-8**, each finger receptacle **22***a*, **22***b*, **22***c* may be attached to the fastening element **24** via a respective connecting element or link **44***a*, **44***b*, **44***c*. The links **44***a*, **44***b*, **44***c* may comprise flexible links that allow for some relative movement between the finger receptacles **22***a*, **22***b*, **22***c* and the fastening element **24**, such as to allow a user to adjust or modify the position or orientation of his or her fingers relative to the fastening element and writing implement, while keeping the fingers generally at or near the desired or appropriate orientation for properly holding the writing implement. The links **44***a*, **44***b*, **44***c* may space the finger receptacles **22***a*, **22***b*, **22***c* radially outward from the fastening element and may flex to allow for the user to use his or her fingertips to engage the writing implement during use. For example, the receptacles and/or connecting links may flex to allow the finger receptacles to move radially inward for engagement with the pen or pencil, or may flex sidwardly or pivot relative to the fastening element to allow the user to move his or her fingers so as to be at an angle relative to the longitudinal axis of the fastening element and pen or pencil. Optionally, and desirably, the links **44***a*, **44***b*, **44***c* connect or attach the finger receptacles to the fastening element at or near the open insert ends of the finger receptacles to support the open insert ends relative to the fastening element and writing implement to ease insertion of the user's fingers into the finger receptacles.

[0030] Optionally, the illustrated writing aid **20** may be sized for use by children of approximately 2 to 8 years of age. For example, inner diameter **36***a* of thumb receptacle **22***a* may be approximately 0.5 inches or thereabouts, while the inner diameter **36***b* of middle finger receptacle **22***b* and the inner diameter **36***c* of forefinger receptacle **22***c* may both be approximately 0.4 inches or thereabouts. Also, for example, the length **38***b* of middle finger receptacle **22***b* from insert end **32***b* to cap portion **34***b* may be approxi-

mately 0.8 inches or thereabouts, while the lengths **38***a*, **38***c* of thumb receptacle **22***a* and forefinger receptacle **22***c* may both be approximately 0.5 inches or thereabouts. It should be appreciated that alternatively sized receptacle members may be used and still function as intended. For example, writing aids may be constructed to have smaller or larger finger receptacles for use by children having differently sized fingers or for targeting more specifically at a particular age of size group, while remaining within the spirit and scope of the present invention.

[0031] Optionally, the writing aid may be constructed for teens or adults and men or women, for aiding such groups of individuals to hold writing implements. For example, an embodiment of the writing aid adapted for adults, inner diameter **36***a* of the thumb receptacle **22***a* may be approximately 0.7 inches or thereabouts, while the inner diameter **36***b* of the middle finger receptacle **36***b* and the inner diameter **36***c* of forefinger receptacle **22***c* may both be approximately 0.6 inches or thereabouts. Also, the length **38***b* of middle finger receptacle **22***b* from insert end **32***b* to cap portion **34***b* may be approximately 1.1 inches or thereabouts, while the lengths **38***a*, **38***c* of thumb receptacle **22***a* and forefinger receptacle **22***c* may be approximately 0.8 inches or thereabouts and 0.7 inches or thereabouts, respectively.

[0032] Optionally, the writing aid may include adjustable receptacles that are adapted to fit a broad range of finger sizes. For example, as shown in FIG. **9**, a writing aid **320** includes a finger receptacle **322***a* having a slot **326** in the side wall portion **330** of the receptacle. Slot **326** may be tapered, such that the slot widens at an open insert end **332***a* of finger receptacle **322***a*. An adjustable belt or strap or adjusting element **328** is connected to the receptacle on one side of slot **326**, such as near open insert end **332***a*. A catch or clasp **334** is connected to receptacle **322***a* at a side wall portion of receptacle **322***a* at the opposite side of slot **326**. Clasp **334** is adapted to receive a portion of strap **328**, such that strap **328** may be selectively adjusted to tighten or release side wall portion **330** of receptacle **322***a* about an inserted finger of a user. Clasp **334** is also adapted to retain or secure strap **328** in a selected position when a proper or comfortable fit is achieved. Although writing aid **320** is shown with finger receptacle **322***a* having the adjustable slot and strap configuration, the other finger receptacles of the writing aid may also or otherwise have the adjustable slot and strap configuration. Thus, writing aid **320** is adapted to fit a broad range of finger sizes, such that one writing aid may be used for both adults and children. Writing aid **320** may otherwise be substantially similar to writing aid **20**, discussed above, such that a detailed discussion of the writing aids need not be repeated herein.

[0033] As shown in FIG. **3**, the illustrated fastening element **24** is formed as a generally circular ring or band. As shown, finger receptacles **22***a*, **22***b*, **22***c* are attached or joined to fastening element **24** via respective connecting links **44***a*, **44***b*, **44***c*, and are generally evenly spaced about fastening element **24**. Thus, thumb receptacle **22***a*, forefinger receptacle **22***c*, and middle finger receptacle **22***b* are all attached to fastening element **24** approximately 120 degrees apart. Alternative spacings, however, may be employed while remaining within the spirit and scope of the present invention. Fastening element **24** is adapted to receive a writing implement therein, so as to be generally affixed at the outside surface of the writing implement **26**, with the writing implement **26** being received into the inner diameter **42** of fastening element **24**. In the illustrated embodiment, fastening element **24** is undersized and flexible, so as to be adapted to stretch over the outside diameter of the writing implement **26** and be retained thereon due to the elastomeric nature of the fastening element **24**. The fastening element **24** also provides the base at which the finger receptacles are attached and from which the finger receptacles extend radially outwardly therefrom.

[0034] In the illustrated embodiment, inner diameter **42** of fastening element **24** is approximately 0.25 inches such that writing aid **20** may be mounted to typical sized pencils, pens, and the like. However, it should be appreciated that alternatively sized and configured fastening elements may be provided for use with alternative writing implements and still function as intended within the scope of the present invention. For example, greater or smaller diameters may be provided to enable use with writing implements such as chalk, highlighters, crayons, or markers. Still further, a non-circular fastening element may be used, such as a generally square or rectangle or hexagonal shaped fastening element. Optionally, a generally open or C-shaped fastening element may be employed that is adapted to be snapped or clasped onto a writing implement rather than being slid along the length of the writing implement. It should also be appreciated that a fastening element may be constructed to be rigid or semi-rigid, with flexible finger receptacles and/or connecting links attached thereto or formed therewith.

[0035] Optionally, the writing aid may have multiple fastening elements. For example, and such as shown in FIG. **2**A, a writing aid **120** of substantially similar construction to writing aid **20** is shown. However, writing aid **120** includes two fastening elements or rings **124***a*, **124***b* joining finger receptacles **122***a*, **122***b*, **122***c*. Writing aid **20** may otherwise be substantially similar to writing aid **120**, such that a detailed discussion of the writing aids need not be repeated herein.

[0036] Optionally, the writing aid may be open at both ends of the finger receptacles. For example, and as shown in FIG. **2**B, a writing aid **220** includes truncated finger receptacles **222***a*, **222***b*, **222***c* having respective open finger extension ends **235***a*, **235***b*, **235***c* opposite the open insert ends **232***a*, **232***b*, **232***c*. The open insert ends **232***a*, **232***b*, **232***c* enable the tip or end of a user's fingers to partially extend out of finger receptacles **222***a*, **222***b*, **222***c* when the user's fingers are inserted therein. This allows the user's fingers to contact the writing implement, which may thereby provide the user with a greater amount of feel or control when using the writing aid and writing implement. In addition, such contact with the writing implement may also facilitate the transition to use of a writing implement by the user without a writing aid.

[0037] Optionally, a writing aid may have fewer than three finger receptacles and still function as intended within the scope of the present invention. For example, a writing aid may have only one or two finger receptacles. Such writing aids may be used, for example, to aid individuals in writing that have one or more injured fingers or that have lost one or more fingers.

[0038] For example, and with reference to FIG. **10**, a writing aid **420** for aiding writing has a single finger receptacle **422** (for receiving a single finger **428**) and two fastening elements **424***a*, **424***b* for attaching the writing aid to the writing implement. Similarly, and with reference to FIGS. **11** and **12**, a writing aid **520** has two finger receptacles **522***b*, **522***c* and two fastening elements **524***a*, **524***b*. Finger receptacles **522***b*, **522***c* of writing aid **520** may receive two fingers of a user, such as, for example, the forefinger and middle fingers of a user (or any other two fingers depending on the application of the writing aid). Writing aids **220**, **320**,

420 and **520** may otherwise be substantially similar to writing aid **20**, discussed above, such that a detailed discussion of the writing aids need not be repeated herein.

[0039] The finger receptacles of each writing aid illustrated herein are shown as being generally axially aligned when not being used. However, alternative writing aids may be formed having finger receptacles that are not generally axially aligned and still function as intended within the scope of the present invention. For example, although not shown, an alternative writing aid may be formed having a thumb receptacle member and a forefinger receptacle member that are generally axially aligned, with a middle finger receptacle member that is turned or angled relative to the thumb receptacle member and forefinger receptacle member. It should be appreciated that the middle finger of some individuals may be turned or positioned at an angle relative to the thumb and forefinger when holding a writing implement such that the middle finger is approximately or generally perpendicular to the axis of the writing implement. Such an angling of fingers may be accommodated via the angle of the finger receptacles or the flexibility of the finger receptacles and/or the flexibility of the connecting link between the finger receptacles and the fastening element. It should be appreciated that the formation of writing aids from an elastomeric material allows the finger receptacles to move or stretch relative to one another. Other materials, however, may not provide enough flexing of the finger receptacles relative to each other. Thus, having a finger receptacle that is turned in the manner discussed above may be more advantageous with writing aids formed from less flexible materials.

[0040] Optionally, a writing aid, such as a writing aid similar to writing aid **20**, **120**, **220**, or **320**, for example, may be directly formed with or molded onto a writing implement. The fastening element or elements of such an embodiment may be affixed or molded directly to the shaft of the writing implement. Optionally, the outer shell or shaft of the writing implement may define or form the fastening element, in which case the finger receptacle or receptacles may be secured directly to the writing implement. The outer shell of the writing implement to which the writing aid is molded or attached may be formed of a plastic or polymeric material. Optionally, where a writing aid is secured to a pre-existing writing implement, it is envisioned that the writing aid may be formed or attached to the writing implement by an overmold process or the like.

[0041] Therefore, the writing aid of the present invention provides a readily useable device for teaching younger children (or adults) the proper form for holding writing implements. The writing aid may be readily applied and removed to a variety of writing implements and enables a child (or adult) to be trained in proper writing technique while limiting the need for a teacher to manually position and/or hold the child's hand to the writing implement. In addition, the writing aid also provides a convenient device to assist individuals with hand and/or finger infirmities in holding a writing implement.

[0042] Changes and modifications in the specifically described embodiments can be carried out without departing from the principles of the present invention, which is intended to be limited only by the scope of the appended claims, as interpreted according to the principles of patent law including the doctrine of equivalents.

The embodiments of the invention in which an exclusive property or privilege is claimed are defined as follows:

1. A writing implement holding device, said holding device comprising:

at least one finger receptacle, said at least one finger receptacle being configured to receive at least one finger of a user at least partially therein, said at least one finger receptacle including side wall portions and an open insert end, said insert end being configured to enable a user to insert at least one finger into said at least one finger receptacle such that said side wall portions surround a segment of the inserted finger or fingers;

at least one fastening element, said at least one finger receptacle being attached to said at least one fastening element;

said at least one fastening element being configured to be removably secured to a writing implement; and

wherein said holding device is configured to aid use of the writing implement by a user when the user inserts at least one finger into said at least one finger receptacle when said writing aid is secured to the writing implement.

2. The writing implement holding device of claim **1**, wherein said at least one finger receptacle comprises at least a first finger receptacle and a second finger receptacle, said first and second finger receptacles being configured to receive a respective finger of a user.

3. The writing implement holding device of claim **2** further comprising a third finger receptacle, said third finger receptacle being joined to said at least one fastening element.

4. The writing implement holding device of claim **3**, wherein said first finger receptacle is configured to receive a thumb of a user, said second finger receptacle is configured to receive an index finger of a user, and said third finger receptacle is configured to receive a middle finger of a user.

5. The writing implement holding device of claim **4**, wherein said first, second, and third finger receptacles each include generally conical side wall portions, said insert ends being configured to enable the user to insert the respective fingers into said finger receptacles such that said side wall portions surround a segment of the inserted fingers.

6. The writing implement holding device of claim **5**, wherein said conical side wall portions have inner side wall portions positioned adjacent to said fastening element and outer side wall portions opposite said inner side wall portions, wherein said inner side wall portions are generally parallel to said writing implement and said outer side wall portions flare radially outward from said writing implement when said writing aid is secured to the writing implement.

7. The writing implement holding device of claim **5**, wherein said side wall portion of said first finger receptacle member defines an inner diameter that is greater than the inner diameters defined by said side wall portions of said second and third finger receptacles.

8. The writing implement holding device of claim **5**, wherein said first, second and third finger receptacles each include a cap portion opposite said insert ends.

9. The writing implement holding device of claim **8**, wherein said third finger receptacle defines a length from said open insert end to said cap portion that is greater than the lengths defined from said open insert ends to said cap portions of said first and second finger receptacles.

10. The writing implement holding device of claim **8**, wherein said cap portions include at least one aperture therethrough.

11. The writing implement holding device of claim **4**, wherein said fastening element comprises an elastomeric fastening ring, said fastening ring being configured to be disposed about the outer circumference of a writing implement.

12. The writing implement holding device of claim **11**, wherein said first, second, and third receptacles are approximately evenly positioned about said fastening ring.

13. The writing implement holding device of claim **11**, wherein said fastening ring is radially expandable to receive a writing implement therein.

14. The writing implement holding device of claim **4**, wherein said third finger receptacle is attached to said fastening element at an angle relative to said first and second finger receptacles.

15. The writing implement holding device of claim **4**, wherein said finger receptacles are integrally formed with said fastening element.

16. The writing implement holding device of claim **1**, wherein said at least one finger receptacle is attached to said fastening element via at least one connecting link that attaches an open insert end of said at least one finger receptacle to said fastening element.

17. The writing implement holding device of claim **16**, wherein said at least one connecting link comprises at least one flexible connecting link to allow for adjustment of an orientation of said at least one finger receptacle relative to said fastening element.

18. The writing implement holding device of claim **1**, wherein said at least one finger receptacle includes a slot in said side wall portion and an adjustable strap connected to said side wall portion at said slot, wherein said strap may be selectively adjusted to tighten said side wall portion around the inserted finger of a user, and wherein said at least one finger receptacle includes a clasp for securing said adjustable strap at a selected position.

19. The writing implement holding device of claim **1**, wherein said at least one finger receptacle includes an open extension end opposite said open insert end, said open extension end being configured to enable a tip portion of the inserted finger to extend out of said at least one receptacle such that the tip portion of the inserted finger is able to contact the writing element.

20. A writing implement holding device, said holding device comprising:

first, second and third finger receptacles, said finger receptacles each being configured to receive a respective finger of a user, each of said finger receptacles including side wall portions and an open insert end, said insert ends being configured to enable a user to insert a finger into a respective one of said finger receptacles such that said side wall portions surround a segment of the inserted fingers;

a fastening element, said finger receptacles being attached to said fastening element; and

wherein said fastening element is configured to at least partially receive a writing implement therethrough to removably secure to the writing implement to aid use of the writing implement when the user inserts a finger into each of said finger receptacles, at least some of said finger receptacles being generally parallel to said writing implement when said writing aid is secured thereto.

21. The writing implement holding device of claim **20**, wherein said writing aid comprising unitarily formed writing aid molded of an elastomeric material.

22. The writing implement holding device of claim **20**, wherein said first, second and third finger receptacles are attached to said fastening element via respective first, second and third connecting links that attach an open insert end of said first, second and third finger receptacles to said fastening element.

23. The writing implement holding device of claim **22**, wherein at least one of said first, second and third connecting links comprises at least one flexible connecting link to allow for adjustment of an orientation of said finger receptacle relative to said fastening element.

24. A writing implement including a writing implement holding device, said writing implement comprising:

an elongated shaft;

a holding device, said holding device being attached to said shaft and including at least one finger receptacle, said finger receptacle being configured to receive at least one finger of a user at least partially therein, said at least one finger receptacle including side wall portions and an open insert end, said insert end being configured to enable a user to insert at least one finger into said at least one finger receptacle such that said side wall portions surround a segment of the inserted finger or fingers; and

wherein said holding device is configured to aid use of said writing implement when the user inserts a finger into said at least one finger receptacle, said at least one finger receptacle guiding and holding the user's finger at or near a preselected orientation relative to said elongated shaft when the user's finger is inserted into said finger receptacle.

25. The writing implement of claim **24**, wherein said at least one finger receptacle is generally parallel to said elongated shaft, and wherein the finger of the user is generally parallel to said elongated shaft when inserted into said at least one finger receptacle.

26. The writing implement of claim **24**, wherein said holding device is overmolded onto a portion of said elongated shaft, and wherein said elongated shaft is formed of at least one of a plastic, a polymeric, and a metallic material.

27. The writing implement of claim **24**, wherein said at least one finger receptacle comprises first, second and third finger receptacles.

28. The writing implement of claim **27**, wherein said first, second and third finger receptacles comprise generally conical side wall portions.

29. The writing implement of claim **24**, wherein said at least one finger receptacle is attached to said fastening element via at least one connecting link that attaches an open insert end of said at least one finger receptacle to said fastening element.

* * * * *